Bira ELP-series

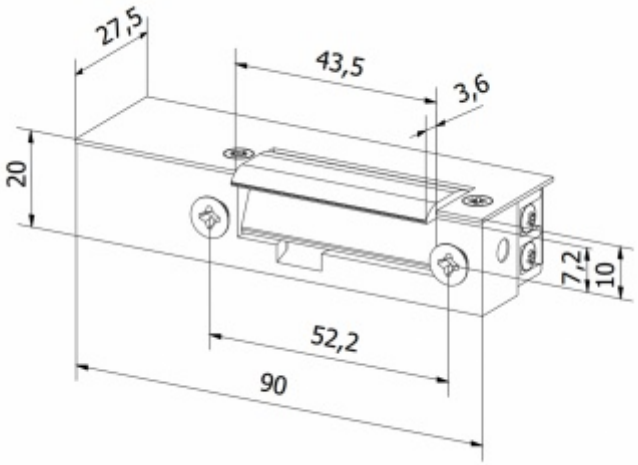

Electric strikes BIRA ELP-series for wooden fire-resistant doors with classification EI30. Certified according to Resolution CPR 305/2011and the EU harmonized standard for electric strikes 14846.

ELP-series feature steel latch without adjustment and asymmetric housing. Applied in left and right doors.

Characteristic:

- For wooden fire-resistant doors (clasification EI30) certified according to 14846
- fail-secure (NC normally closed) or fail-safe (NO normally open)
- size: width 20mm, height 90mm, depth 27,5mm, size of version with door status monitoring: width 20mm x height 97mm x depth 28mm
- mechanical strength – break-in resistance class 2
- mechanical strength – opening cycles 200.000
- DIN-left and DIN-right doors

Models in HARTTE ELP line:

- normally closed
- normally open(mounting on additional lock)
- normally closed for continuous working

Above models available with door status monitoring (M) and/or varistor (V)

ELEKTROZACZEPY

BIRA Spółka z ograniczoną odpowiedzialnością Spółka Komandytowa
ul. Falencka 1B, 05-090 Janki
NIP: 5342544757
bira@bira.pl tel: +48 22 723 90 17

Electric specification

	12AC	12DC	24AC/DC	24AC
Index	ELP-001	ELP-005	ELP-010	ELP-014
Voltage tolerance (V)	8-14	8-14	18-26	18-26
Resistance (Ohm)	13,2	27	70	155
Power consumption AC (mA)	640	-	240	-
Power consumption DC (mA)	-	440	340	150
Continuously powered (100% ED)	no	no	no	no

ELEKTROZACZEPY

BIRA®

BIRA Spółka z ograniczoną odpowiedzialnością Spółka Komandytowa
ul. Falencka 1B, 05-090 Janki
NIP: 5342544757
bira@bira.pl tel: +48 22 723 90 17

Available models

Index	Type	Voltage		Current		Work type		Functions						Housing	Latch
		12V	24V	AC	DC	NC	NO	Mechanical unlocking	Hold-open	Monitoring	Varistor	Strenghten spring	Latch bolt guide		
ELP-001	standard	●		●		●								assymetric	steel
ELP-001-Y	standard	●		●		●					●			assymetric	steel
ELP-005	low-consumption	●			●	●								assymetric	steel
ELP-005-Y	low-consumption	●			●	●					●			assymetric	steel
ELP-009	fail-safed (NO)	●			●		●							assymetric	steel
ELP-009-Y	fail-safed (NO)	●			●		●				●			assymetric	steel
ELP-010	standard		●	●	●	●								assymetric	steel
ELP-010-Y	standard		●	●	●	●					●			assymetric	steel
ELP-014	low-consumption		●		●	●								assymetric	steel
ELP-014-Y	low-consumption		●		●	●					●			assymetric	steel
ELP-018	fail-safed (NO)		●		●		●							assymetric	steel
ELP-018-Y	fail-safed (NO)		●		●		●				●			assymetric	steel
ELP-001-KZ	standard	●		●		●				●				assymetric	steel
ELP-001-KZY	standard	●		●		●				●	●			assymetric	steel
ELP-005-KZ	low-consumption	●			●	●				●				assymetric	steel
ELP-005-KZY	low-consumption	●			●	●				●	●			assymetric	steel
ELP-009-KZ	fail-safed (NO)	●			●		●			●				assymetric	steel
ELP-009-KZY	fail-safed (NO)	●			●		●			●	●			assymetric	steel
ELP-010-KZ	standard		●	●	●	●				●				assymetric	steel
ELP-010-KZY	standard		●	●	●	●				●	●			assymetric	steel
ELP-014-KZ	low-consumption		●		●	●				●				assymetric	steel
ELP-014-KZY	low-consumption		●		●	●				●	●			assymetric	steel
ELP-018-KZ	fail-safed (NO)		●		●		●			●				assymetric	steel
ELP-018-KZY	fail-safed (NO)		●		●		●			●	●			assymetric	steel

Wyjaśnienie funkcji

ELEKTROZACZEPY

BIRA Spółka z ograniczoną odpowiedzialnością Spółka Komandytowa
ul. Falencka 1B, 05-090 Janki
NIP: 5342544757
bira@bira.pl tel: +48 22 723 90 17

Matching mounting elements

Flat plates	• made out of different materials: stainless steel, standard steel, anodized aluminum • polished, plated, galvanized or painted	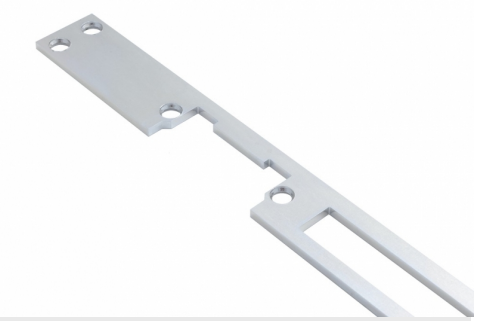
Angle plates	• made out of steel or stainless steel • plated, galvanized or painted	
Boxes	• made out of steel • galvanized or painted • front or side mounting	
Special plates with latch bolt guide securing profile	• made out of steel or stainless steel • plated, galvanized or painted • Wykonane ze stali nierdzewnej lub zwykłej ocynkowanej, niklowanej lub lakierowanej	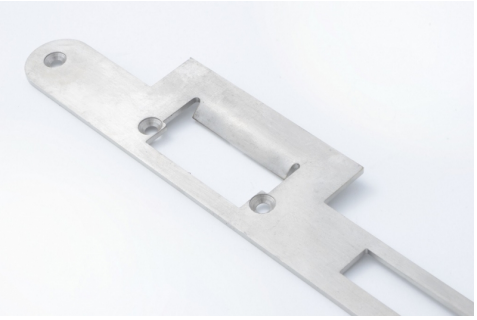
Blachy do wmurowania	Wykonane ze stali zwykłej ocynkowanej, montowane w furtkach	
Mounting brackets for order	• striking plates adapted to customer needs	

ELEKTROZACZEPY

BIRA Spółka z ograniczoną odpowiedzialnością Spółka Komandytowa
ul. Falencka 1B, 05-090 Janki
NIP: 5342544757
bira@bira.pl tel: +48 22 723 90 17